Data Sheet

Article number: 1405008161
Description: KLEE fork joint with outside thread
G 8x16 med 8x1,25 mm thread

Measures

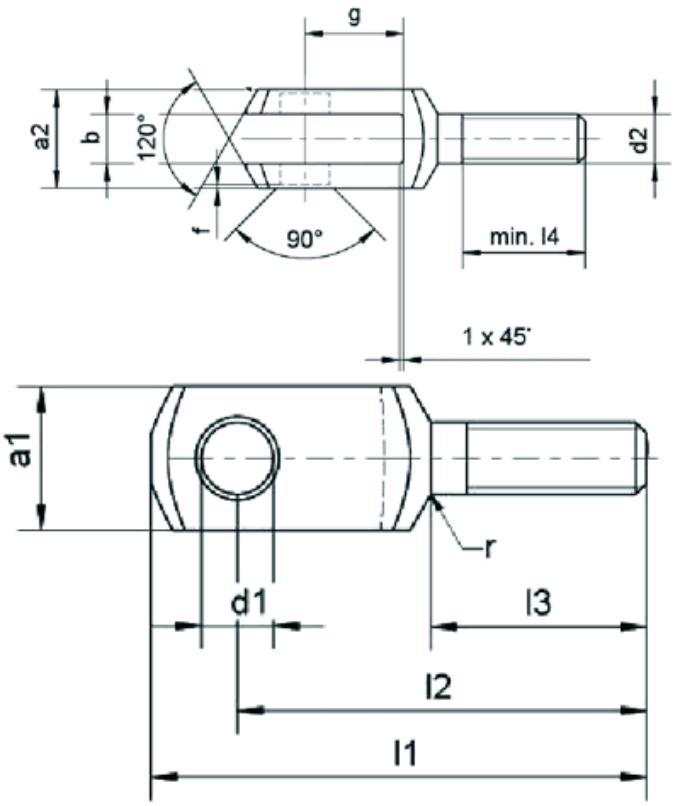

a1 = 16	l2 = 47
a2 = 16	l3 = 25
b = 8	l4 = 20
d1 = 8	r = 0,8
d2 = M 8x1,25	
f = 0,5	
g = 16	
l1 = 57	

Product drawings and brochures of any kind may contain errors for which Brd. Klee A/S cannot be liable.